鉸鍊的快裝和拆卸

Installation / removal

Intermat hinges are distinguished by ergonomic snap-on assembly. The hinge is first threaded into the front of the mounting plate (1). The hinge arm can now be heard to engage on the mounting plate in response to a light press of the finger (2).

The hinge arm is now securely clamped to the plate at five points and with zero play.

As a general rule, hinges are snapped on from top to bottom. Once fitted, the top-most hinge supports part of the door's weight.

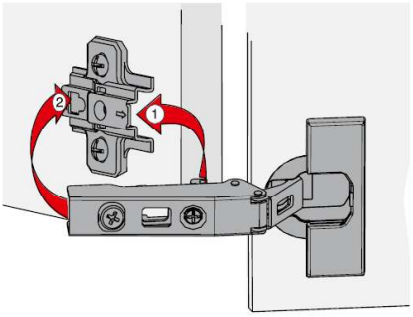

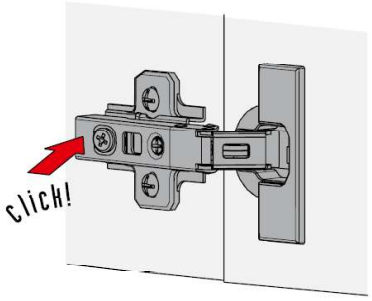

Hinges are removed in the opposite sequence, i.e. from bottom to top, equally as ergonomically.

The hinge is released by lightly pressing the engagement catch (1) which is concealed beneath the side arm for safety reasons.

The hinge arm is now lifted off the mounting plate (2) and the door can be removed towards the front (3).

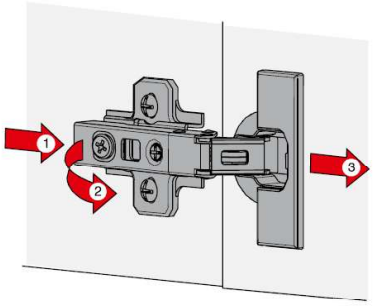

Door adjustment: 門的調整

Overlay adjustment
門覆蓋距離調整

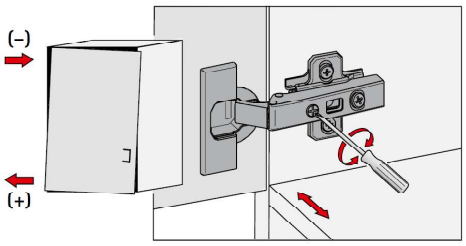

Screw adjustment screw (A) in or out until the door is hanging straight.

Height adjustment
高度調整

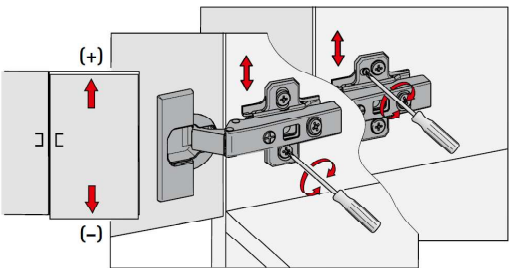

Undo fixing screws a short distance and adjust height of door. Now retighten fixing screw.

Optionally, the adjustment cam on the mounting plate can be used for aligning door height

Depth adjustment by eccentric cam
深度調整

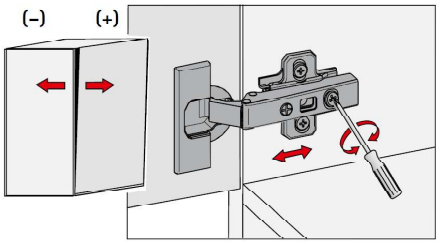

Correct the distance between door and cabinet side by turning the adjustment cam.

Turning anticlockwise: increases distance.

Turning clockwise: reduces distance