www.hettich.com/short/8815e9

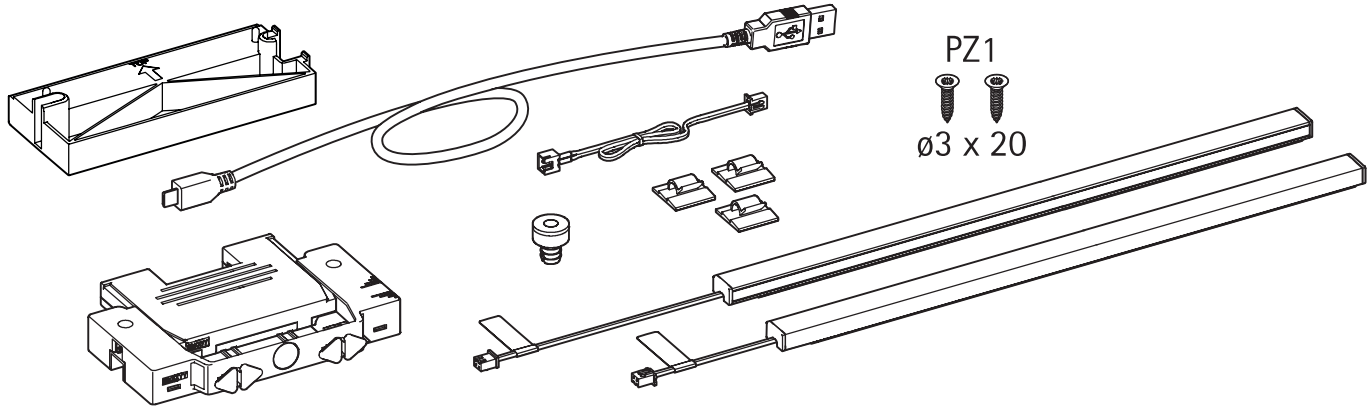

Technical specifications:

Operating voltage:	7.5 V DC
Output voltage:	7.5 V DC
Protection class:	III
Colour temperature:	4000 K
IP rating:	20

Nominal length NL (mm)	Power consumption
450	2x 0.91 W
500	2x 0.98 W
550	2x 1.01 W
650	2x 1.32 W

Safety precautions:

1. Only ever fit with approved installation material or system accessories.
2. No warranty cover in the event of damage caused by incorrect connection.
3. Lay cables so as to leave connection free of strain.
4. If an external flexible cable is damaged, it must only be replaced by the manufacturer or its Customer Service Department.
5. No warranty claims resulting from unauthorised modifications.

Retain these installation instructions!
After fitting the product, please keep these installation instructions in a safe place so that any later changes can be carried out in the proper manner.

No disposal as normal domestic waste! Disposal must comply with local waste disposal/recycling regulations.

Fire and explosion hazard

Minor injuries and burns from incorrect use of rechargeable batteries and faulty rechargeable batteries.

- Reachareable batteries must not be short circuited or placed on electrically conductive objects.
- Damaged rechargeable batteries must not be recharged or used.
- Rechargeable batteries must be protected from moisture and heat.
- Only ever use chargers or USB interfaces supplying 5 V (at least 1 A).
- Do not charge the battery for more than 8 hours.

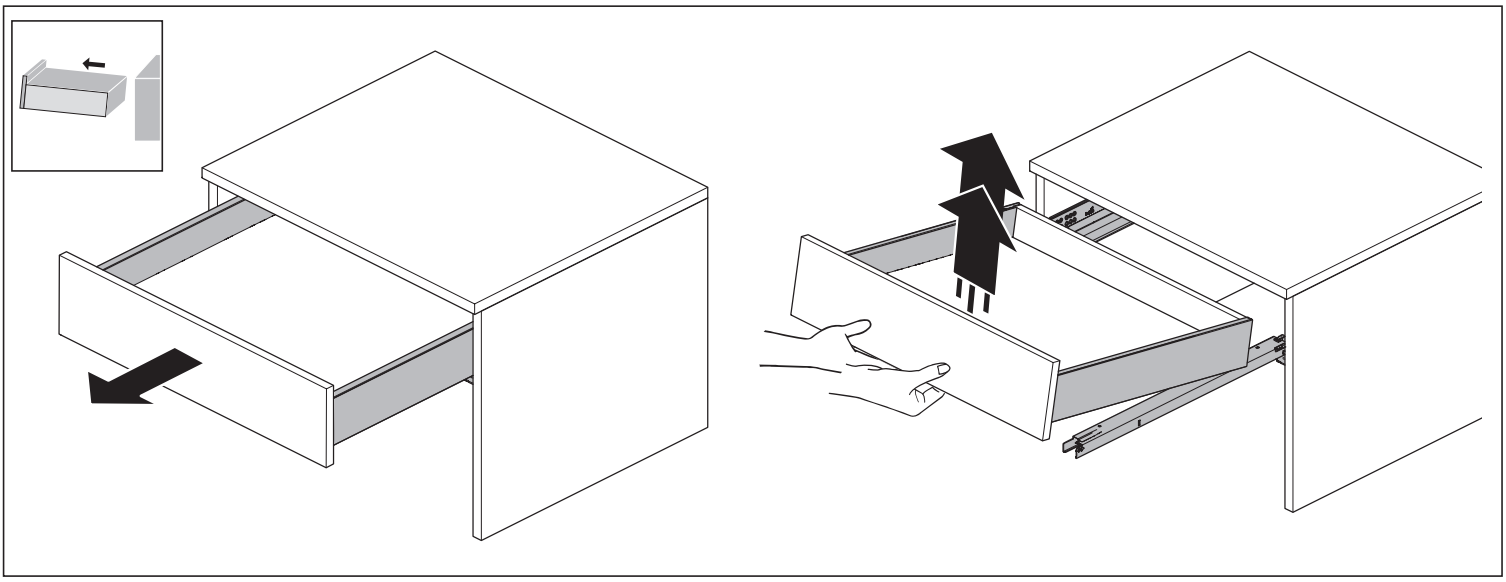

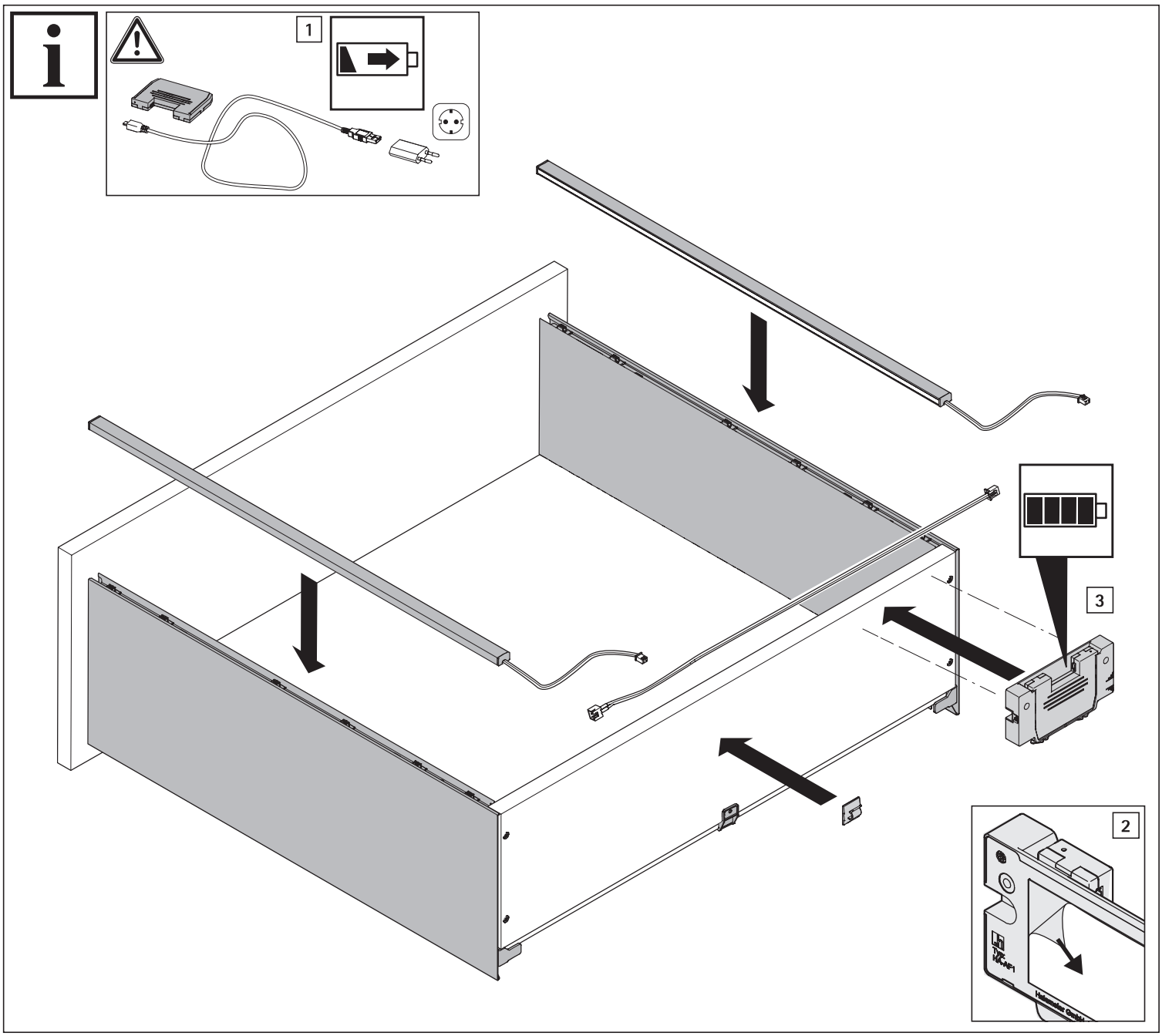
1
3
2

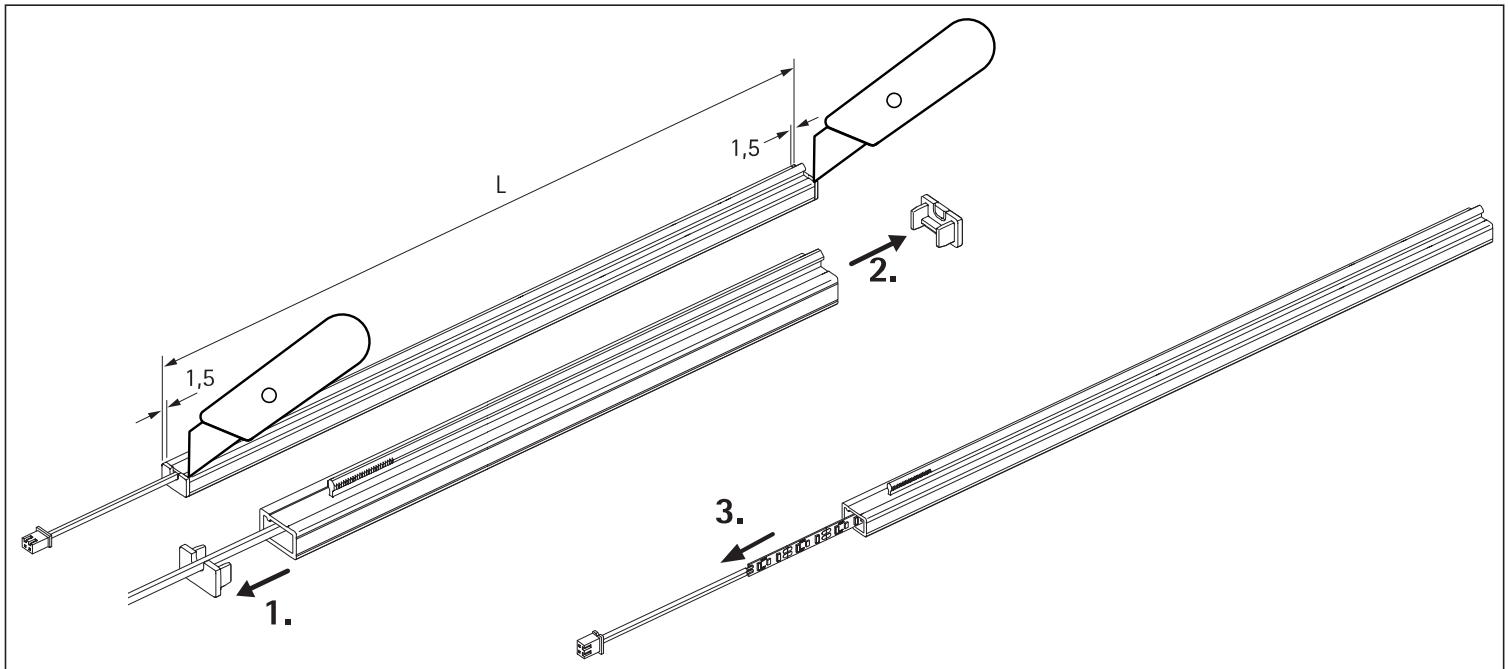

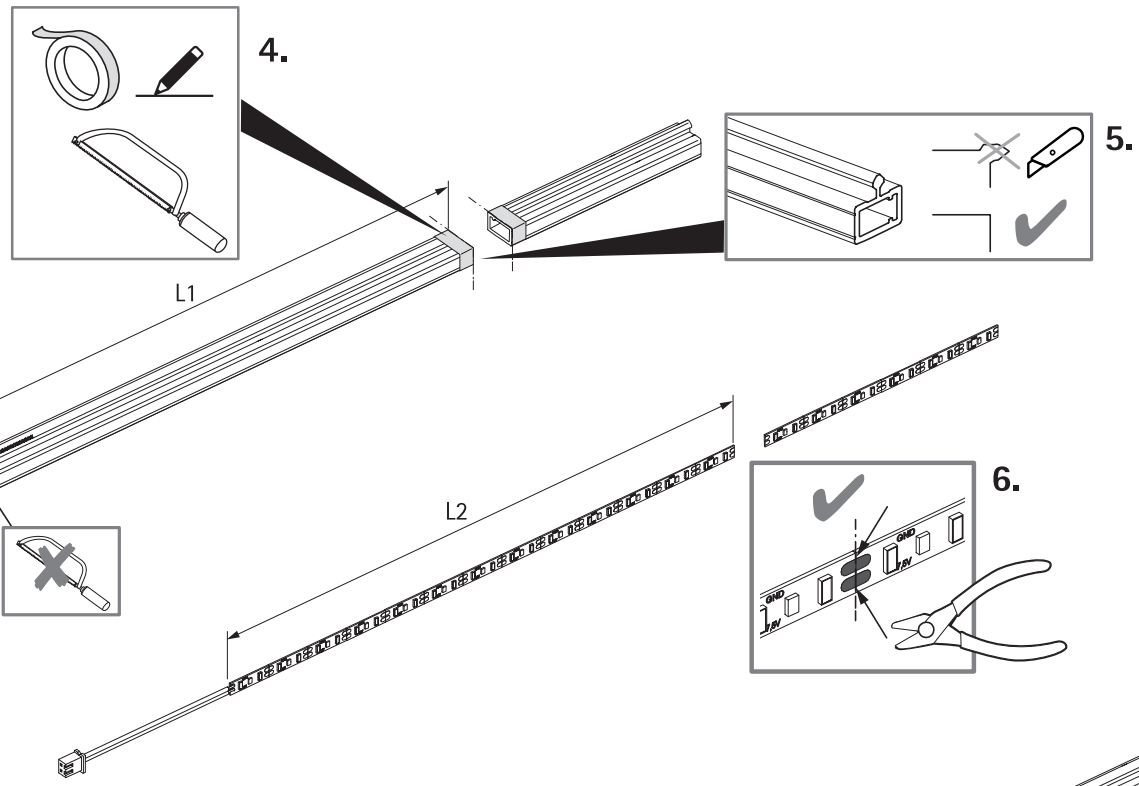

NL	L	L1	L2
270	260	257	247
300	290	287	264
350	340	337	317
400	390	387	370
450	440	437	422
500	490	487	458
550	540	537	510
600	590	587	563
650	640	637	616

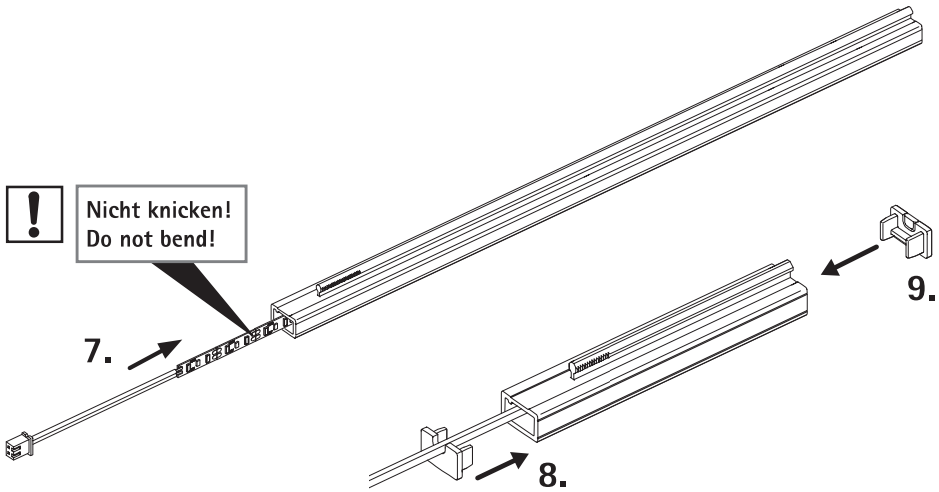

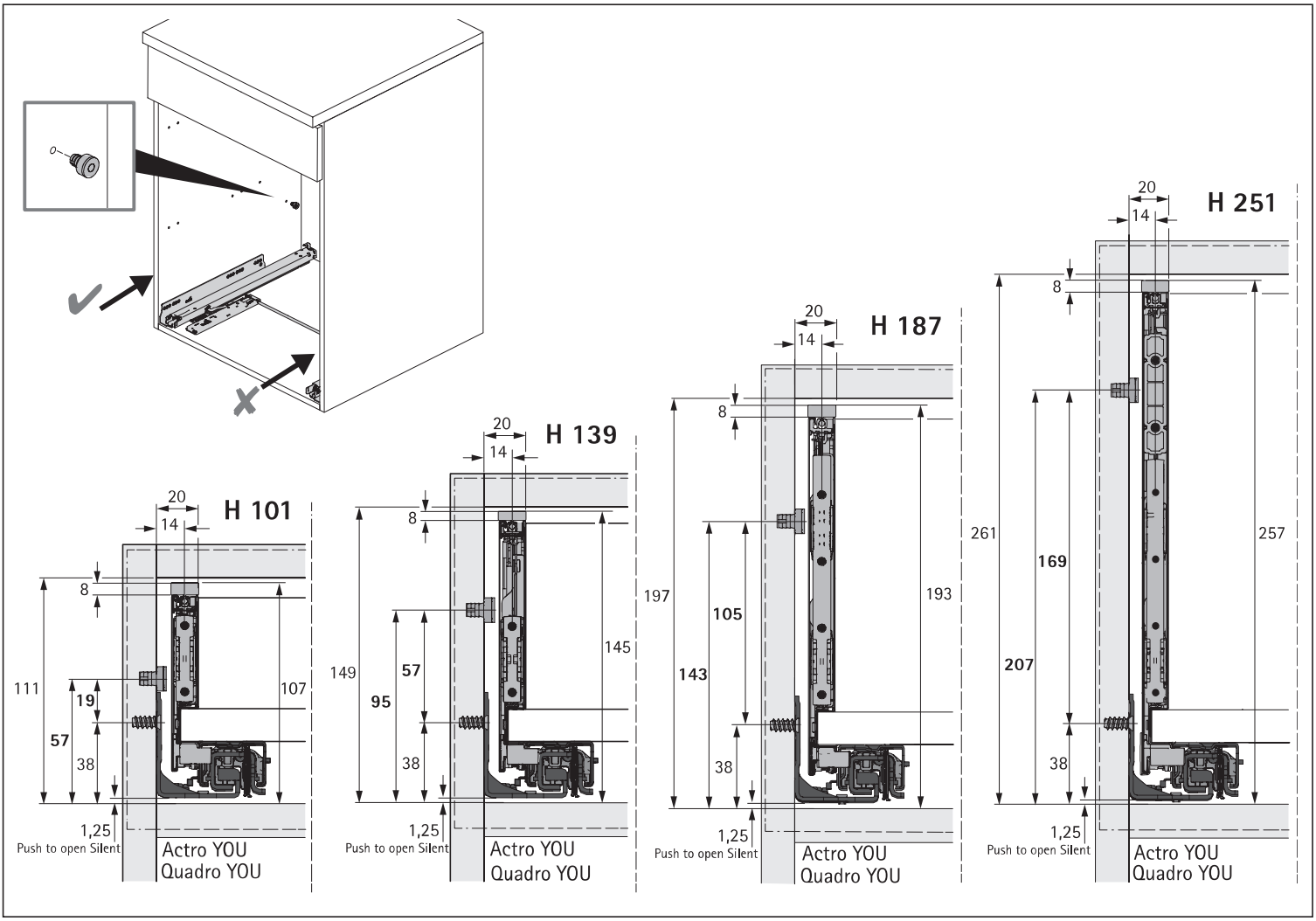

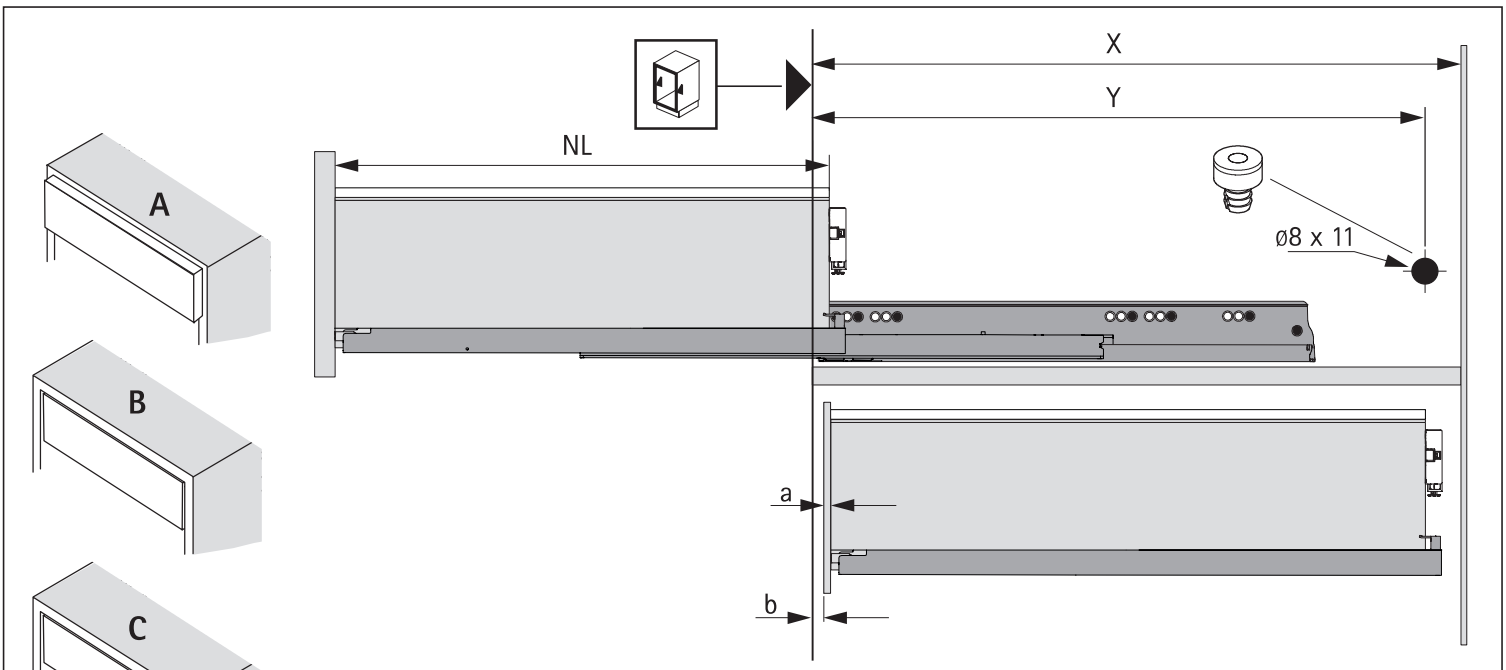

NL								
270	300	350	400	450	500	550	600	650

	X	Y
A	NL + 9 mm	NL
B	NL + a + b + 9 mm	NL + a + b
C	NL + a + b + 15 mm	NL + a + b

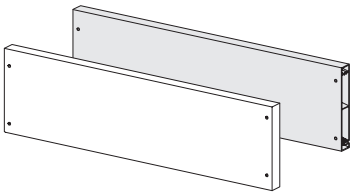

	X
H101	57
H139	95
H187	143
H251	207

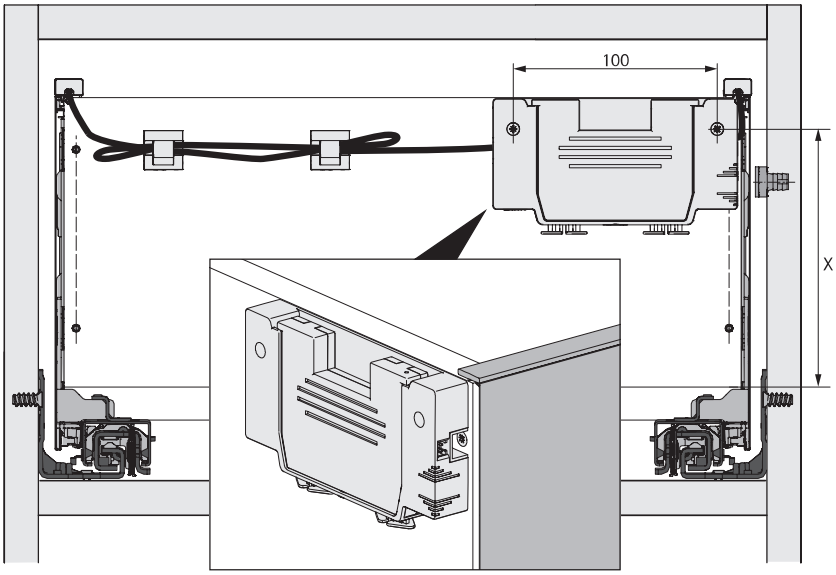

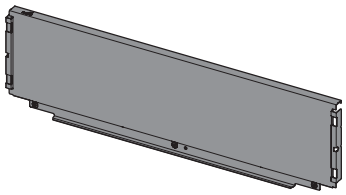

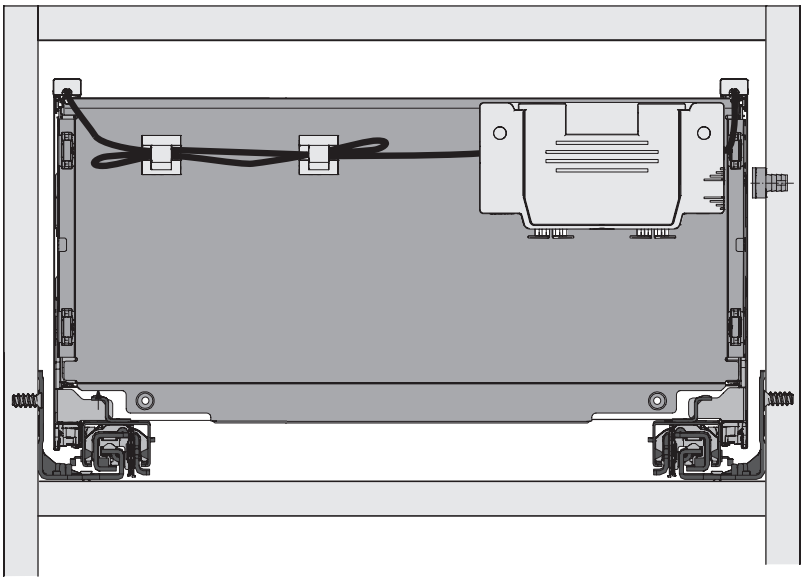

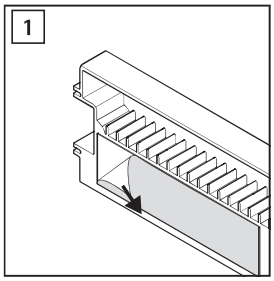

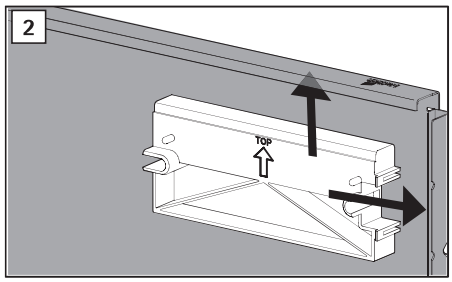

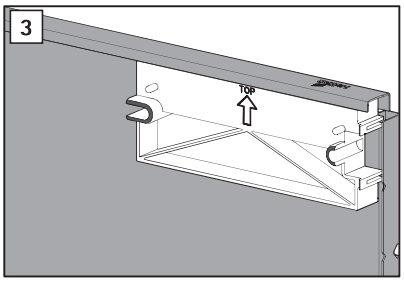

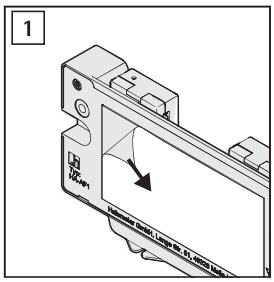

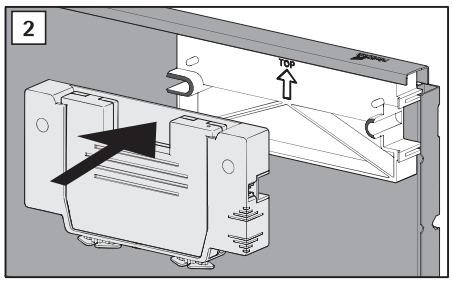

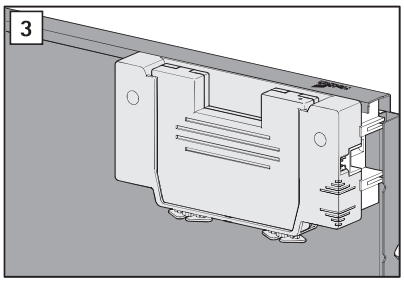

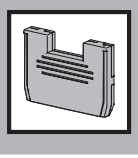

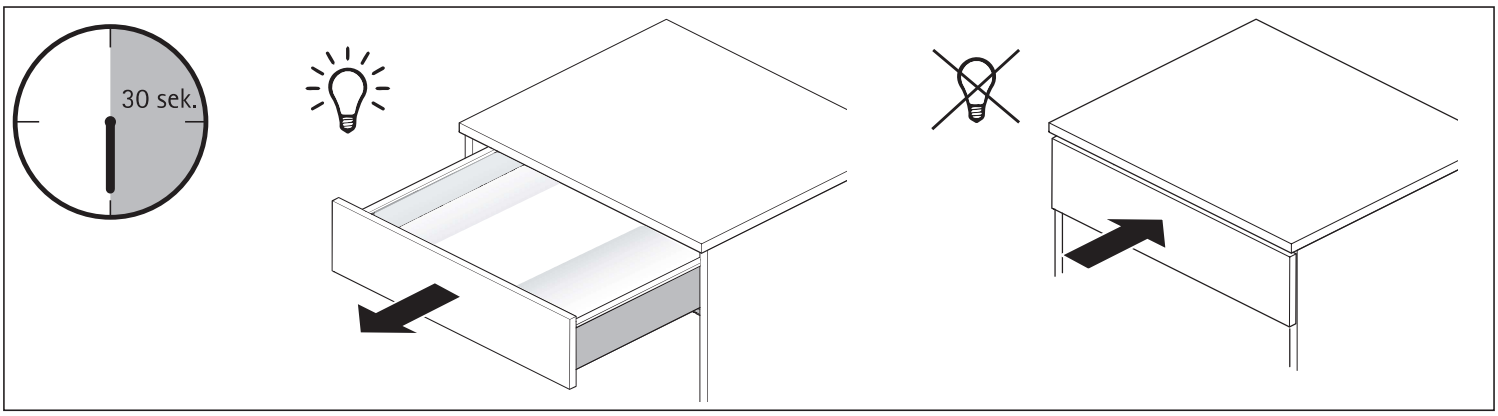
30 sek.

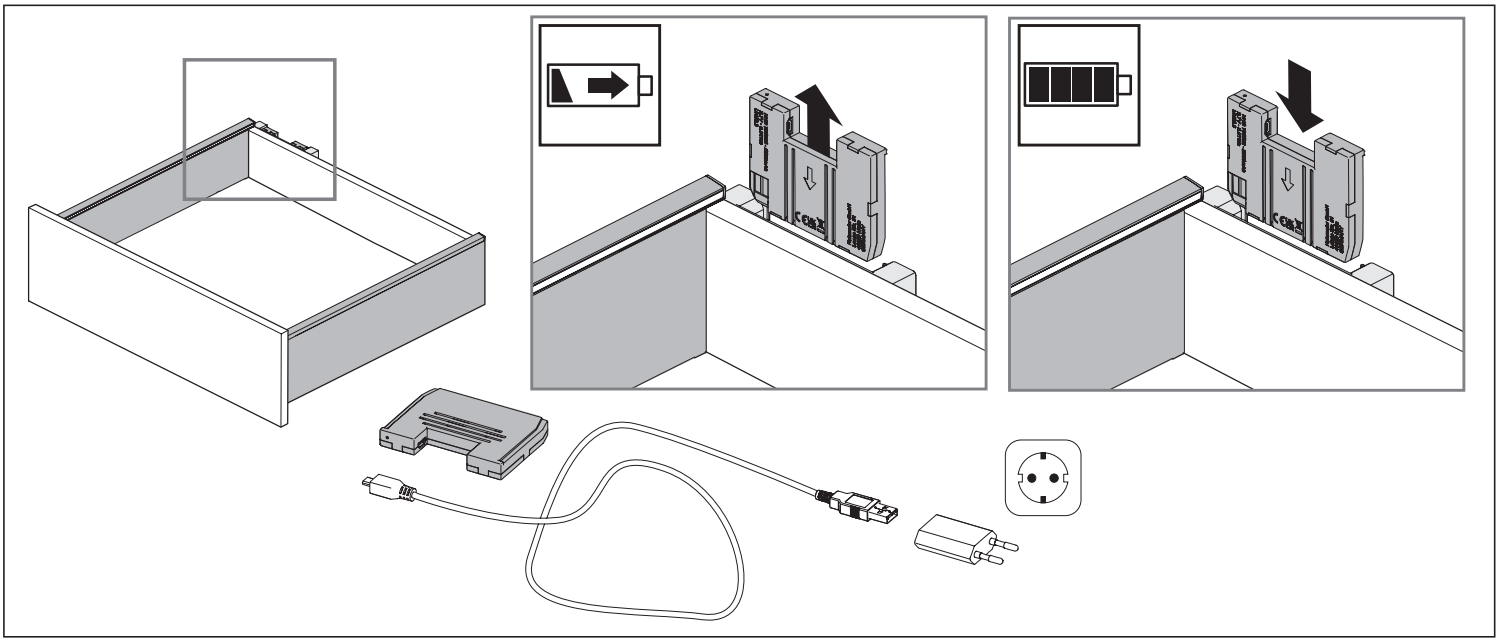

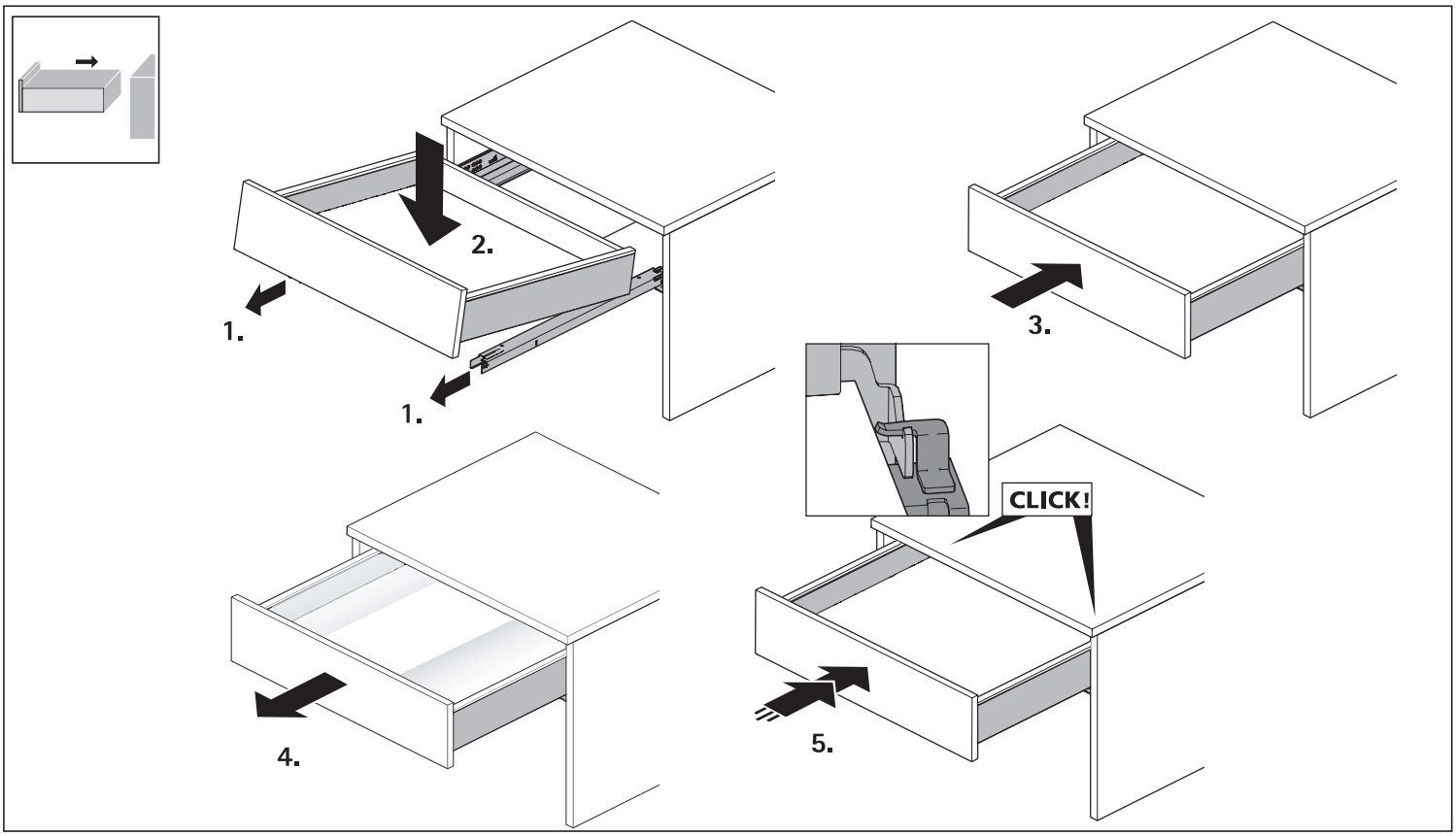
1.
2.
1.
3.
CLICK!
4.
5.